NAME	PAGES	SPEAKER/CLASS	DATE - TIME
Wilmer Callaño	1/3		21/3/26

Title: Circuitos

Keyword

Topic:

Notes: Entrada digital NPN

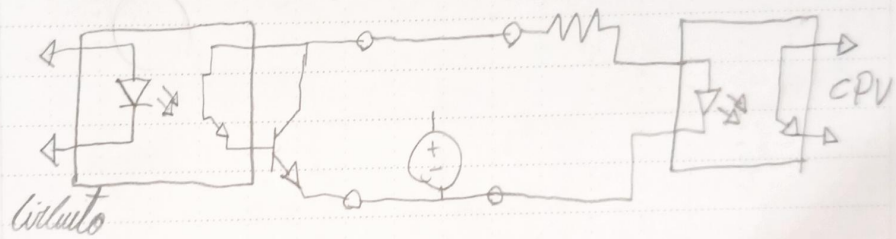

Questions

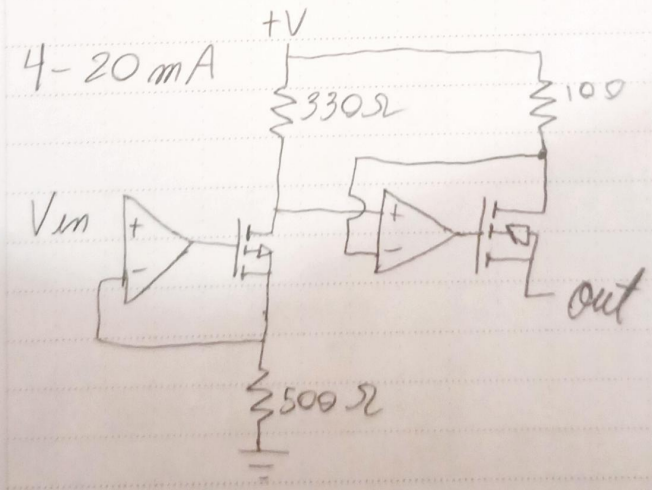

Summary:

NAME	PAGES	SPEAKER/CLASS	DATE - TIME
Wilmin Calcaño	2/3		21/3/26

Title: Calculator

Keyword

Topic:

Notes: 0-10V

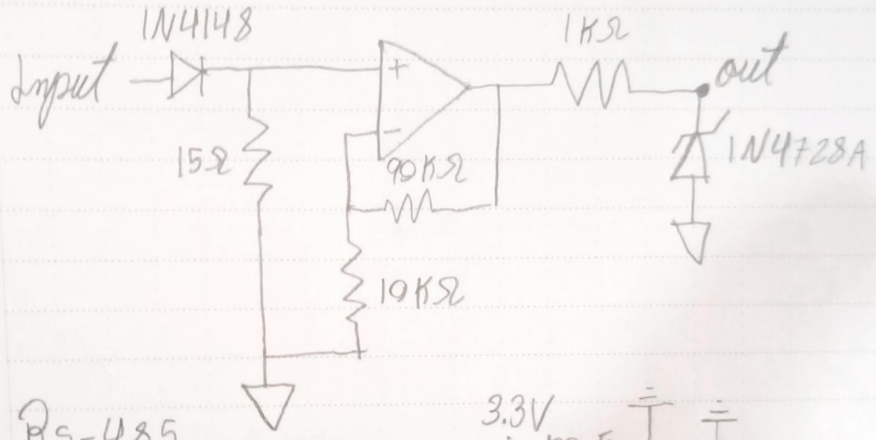

Questions

RS-485

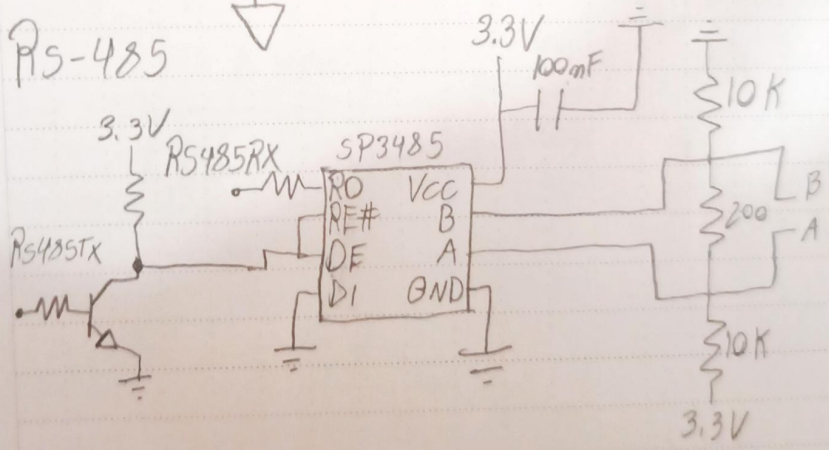

Summary:

By Carlos Pichardo Vieque

NAME	PAGES	SPEAKER/CLASS	DATE - TIME
	3/3		21/3/26

Title: Evaluator

Keyword

Topic:

Notes: Modulo de Relay

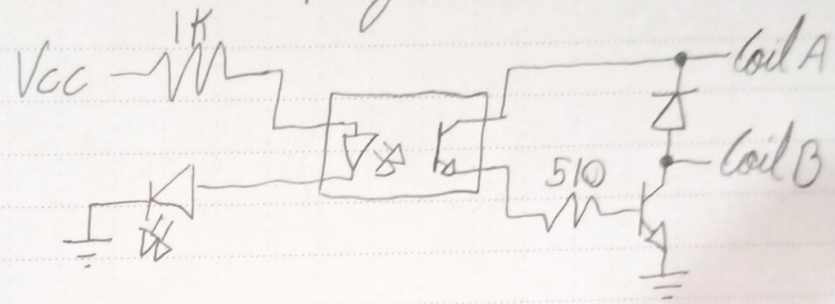

TC Amplifier

Questions

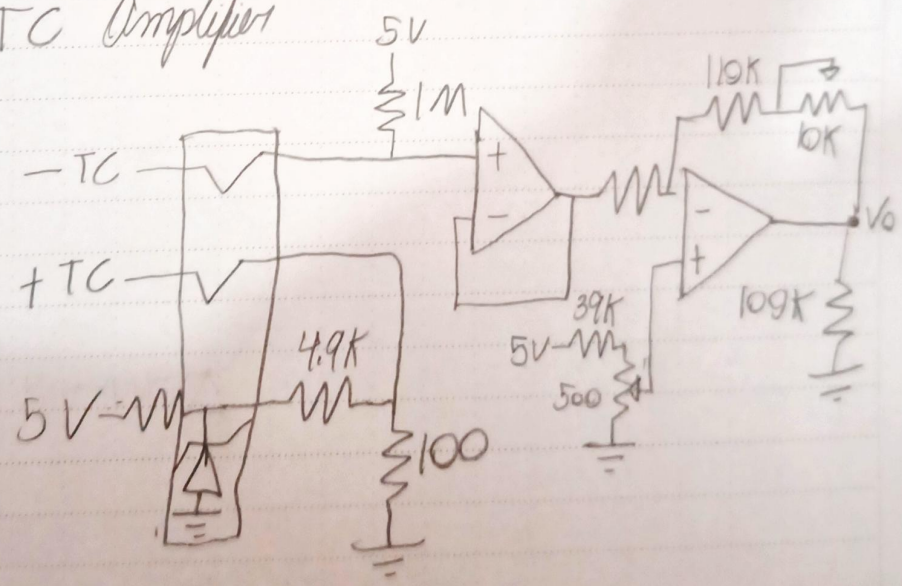

Summary:

By Carlos Richards Vinano